SE-D10 13

## 6003-13P

MULTI-POLE CONNECTORS (13P)

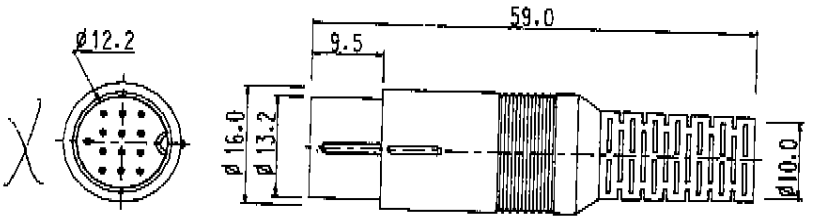


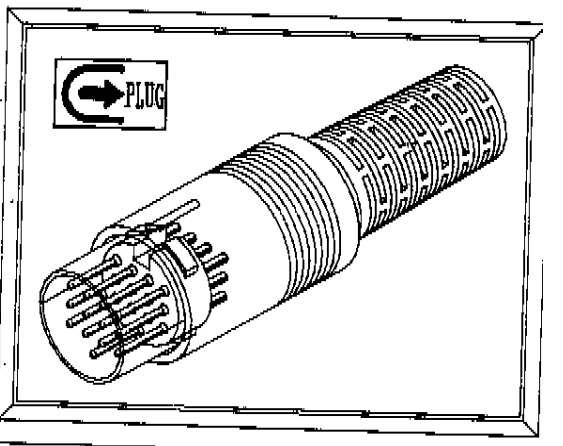


## 6095-13P

ASSEMBLY SOCKET (13P)
QUICK LOCKING TYPE

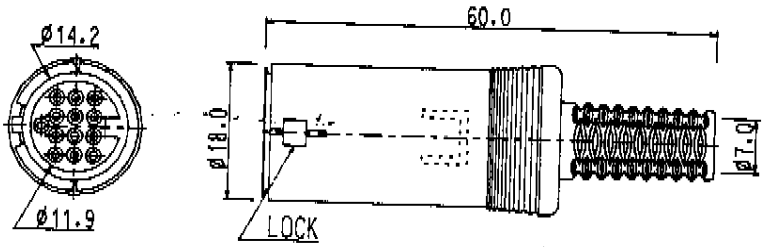


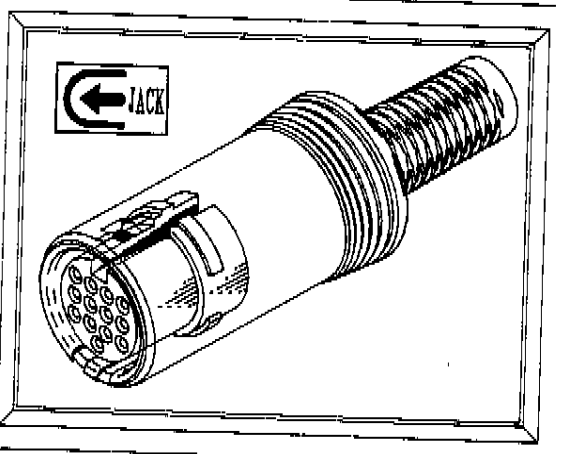


## 6099-13P

ASSEMBLY SOCKET (13P)

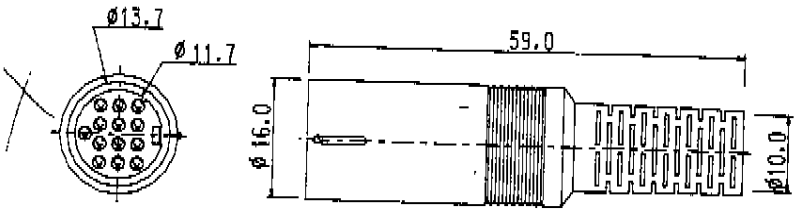


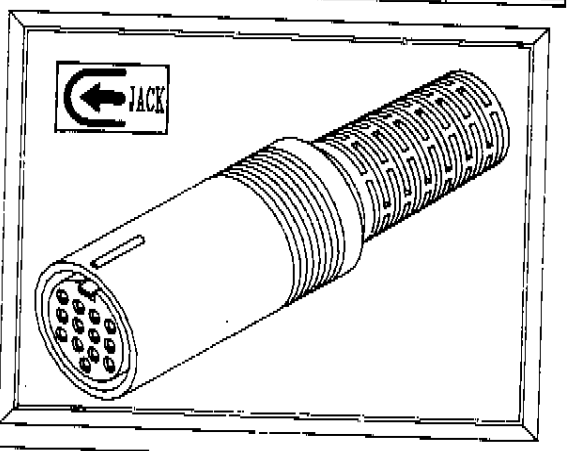


ARRANGEMENT OF CONTACTS

-13P

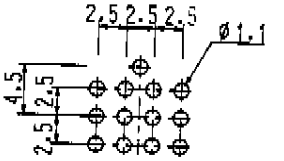




This fax was received by GFI FAXmaker fax server. For more information, visit: http://www.gfi.com